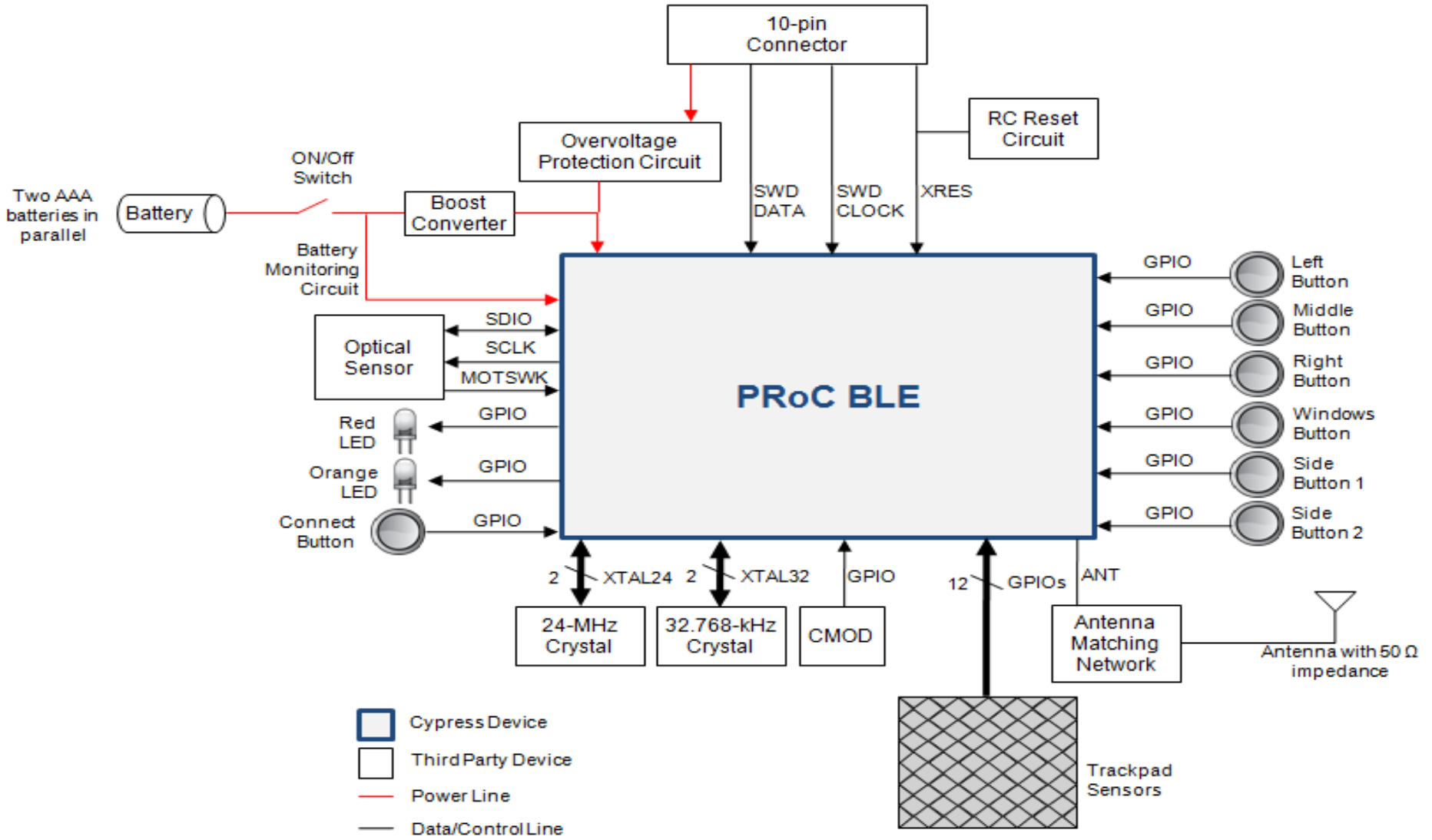

CYPRESS SEMICONDUCTOR © 2014

Title	CY5682 PRoC BLE Touch Mouse Main Board	
Size B	Document Number 630-60218-01	Rev 2.1
Date: Thursday, January 08, 2015	Sheet 1 of 7	

POWER SUPPLY

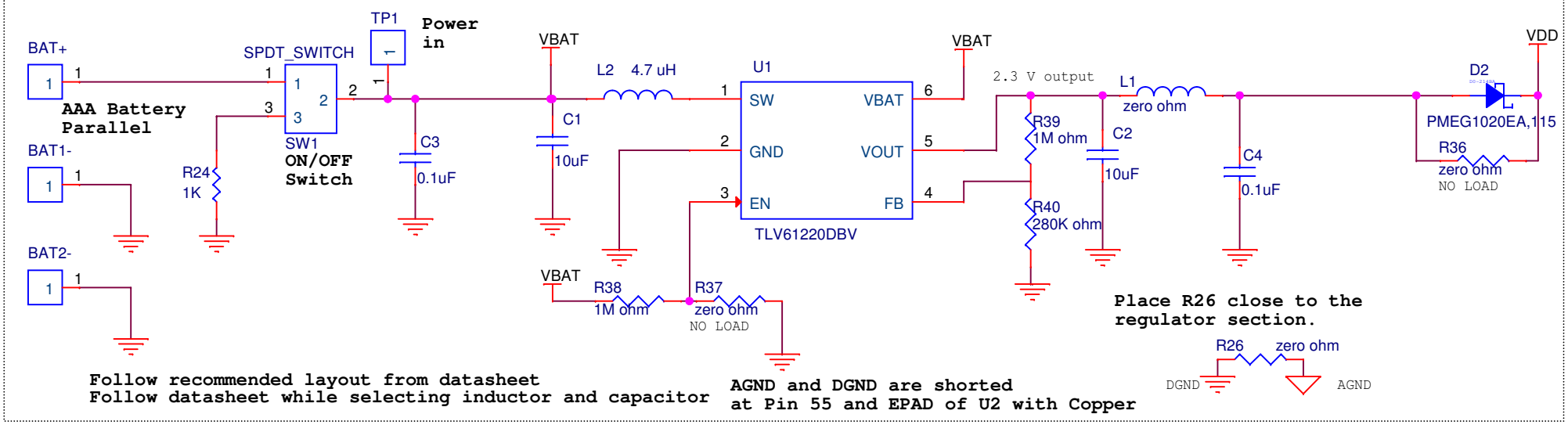

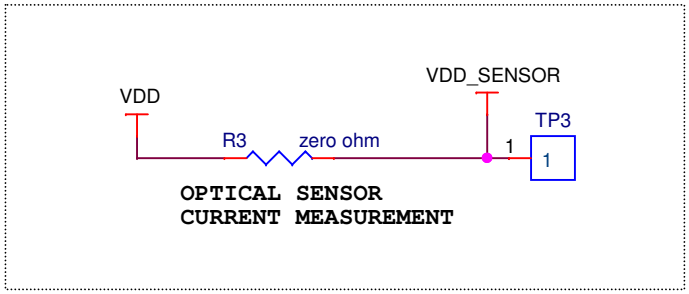

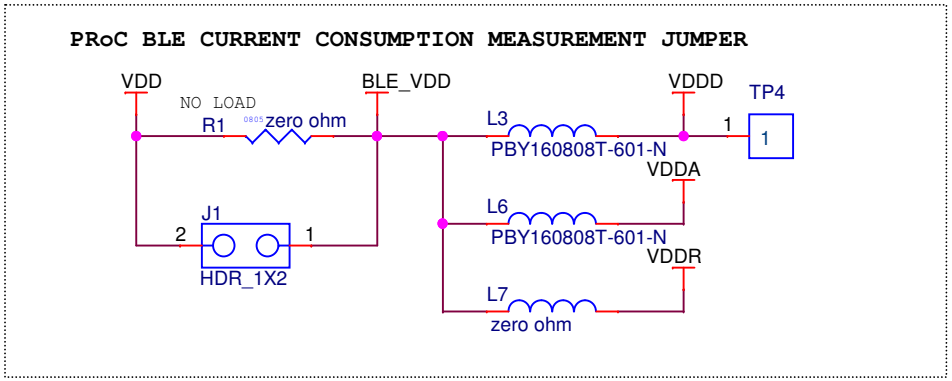

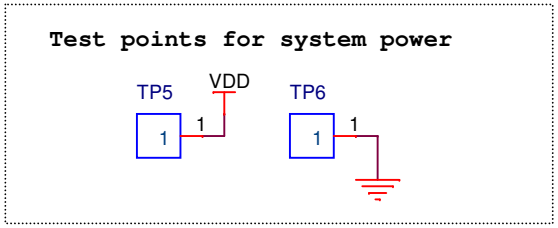

Fix hole for PCB

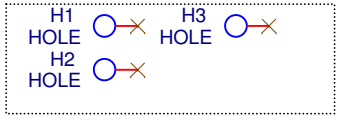

Fix hole for sensor lens

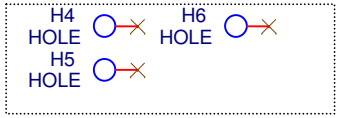

CYPRESS SEMICONDUCTOR © 2014		
Title: CY5682 PRoC BLE Touch Mouse Main Board		
Size: A	Document Number: 630-60218-01	Rev: 2.1
Date: Thursday, January 08, 2015	Sheet 2 of 7	

PRoC BLE Device Connections

32.768 KHz Crystal

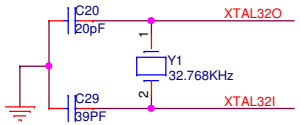

24 MHz Crystal

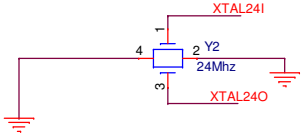

Series Resistor for Trackpad lines

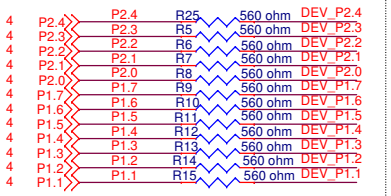

50 Ohm Wiggle Antenna

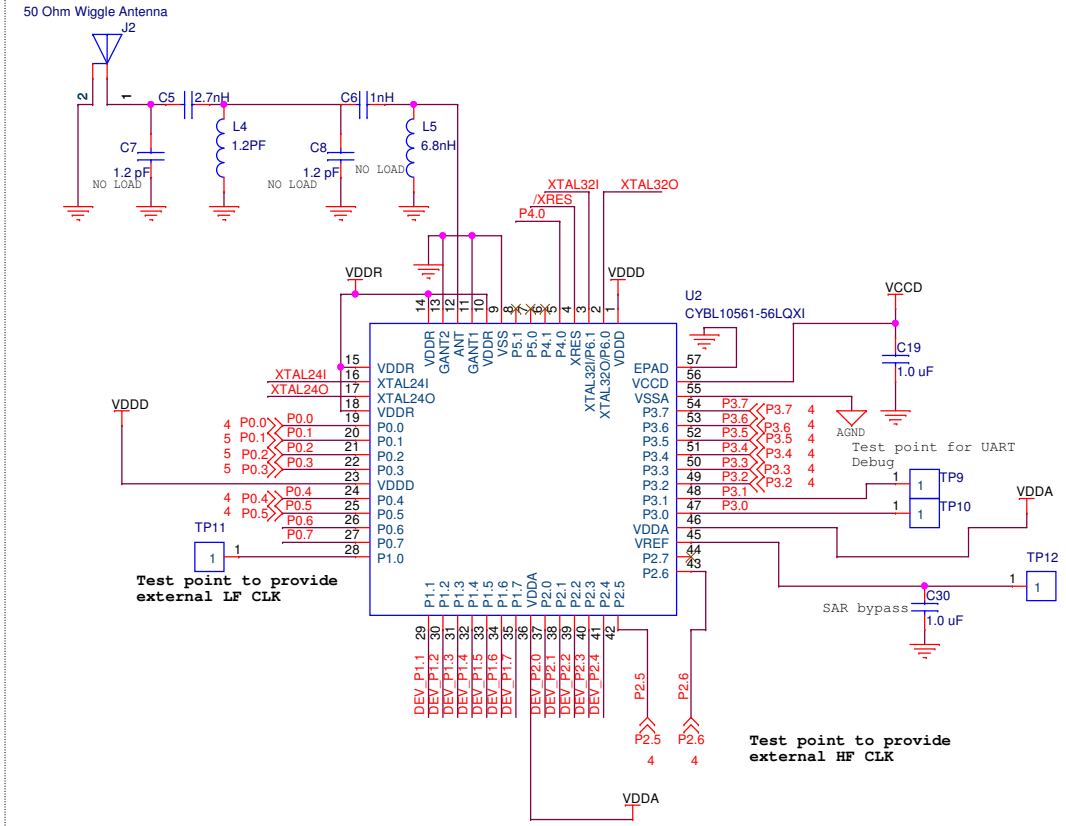

Test points for PRoC BLE device Power

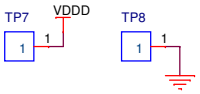

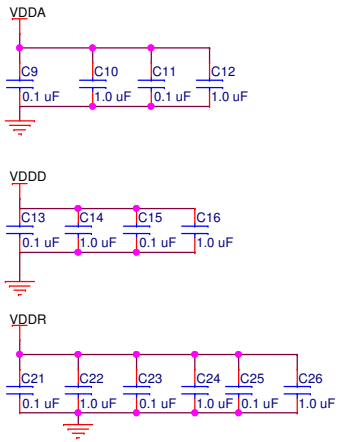

Place all decaps as close to pin as possible

Over voltage Protection Circuit from 3.3 V/5 V of MiniProg3

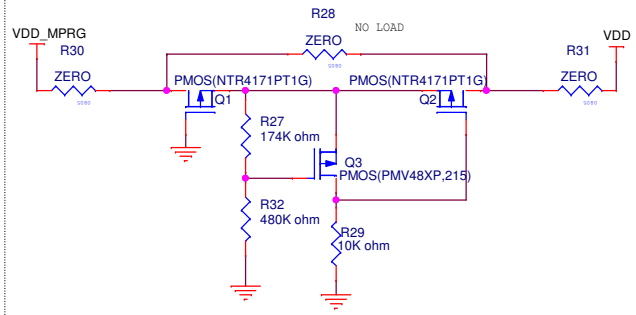

10-Pin MiniProg3 Header

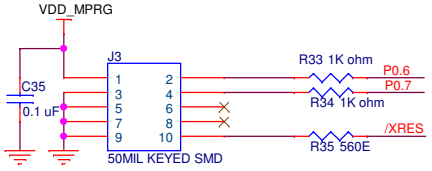

P0.6 - SWD DATA(SWDIO)
P0.7 - SWD CLK

CMOD Capacitor

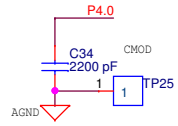

Place CMOD as close to IC Pin as possible
Preferrably use COG type capacitor

RC Reset Circuit

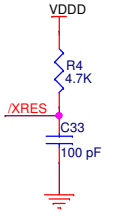

CYPRESS SEMICONDUCTOR © 2014		
Title: CY5682 PRoC BLE Touch Mouse Main Board		
Size: B	Document Number: 630-60218-01	Rev: 2.1
Date: Thursday, January 08, 2015	Sheet 3 of 7	

STATUS LED

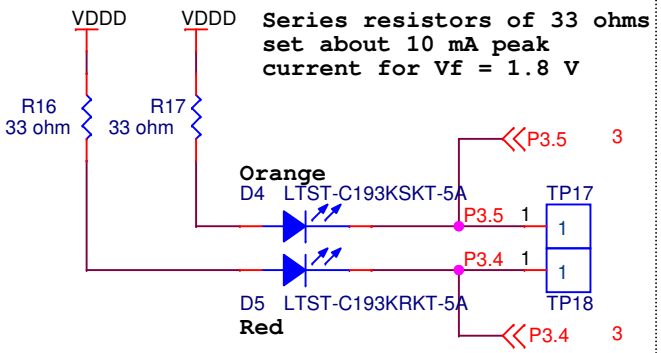

MOUSE BUTTONS

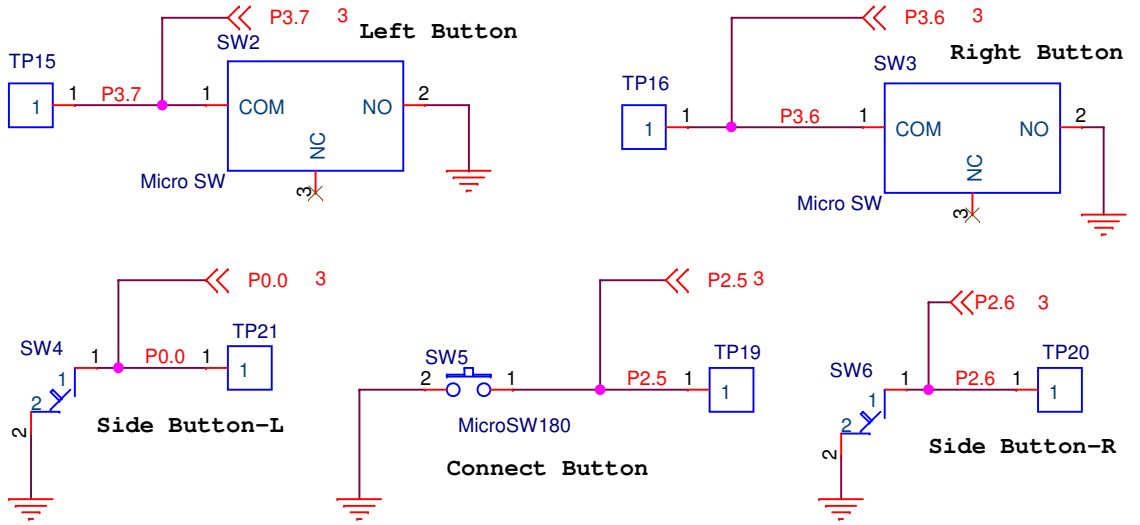

BATTERY MONITORING

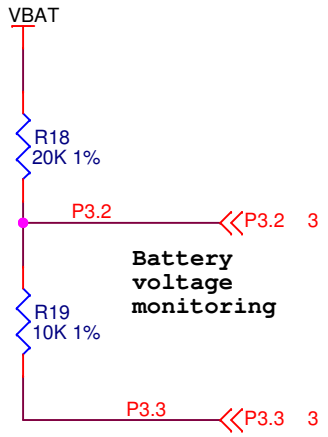

Connector to interface Trackpad Module

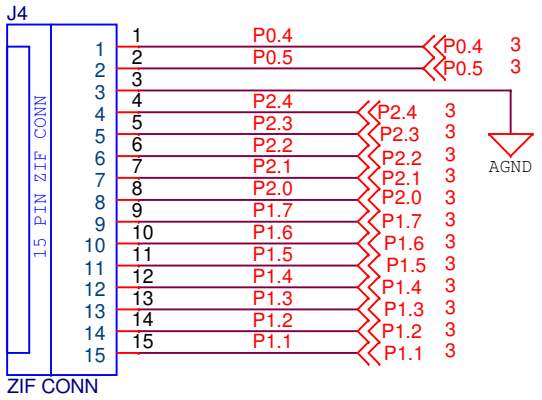

CYPRESS SEMICONDUCTOR © 2014		
Title: **CY5682 PRoC BLE Touch Mouse Main Board**		
Size: A	Document Number: **630-60218-01**	Rev: 2.1
Date: Thursday, January 08, 2015	Sheet 4 of 7	

Optical Sensor

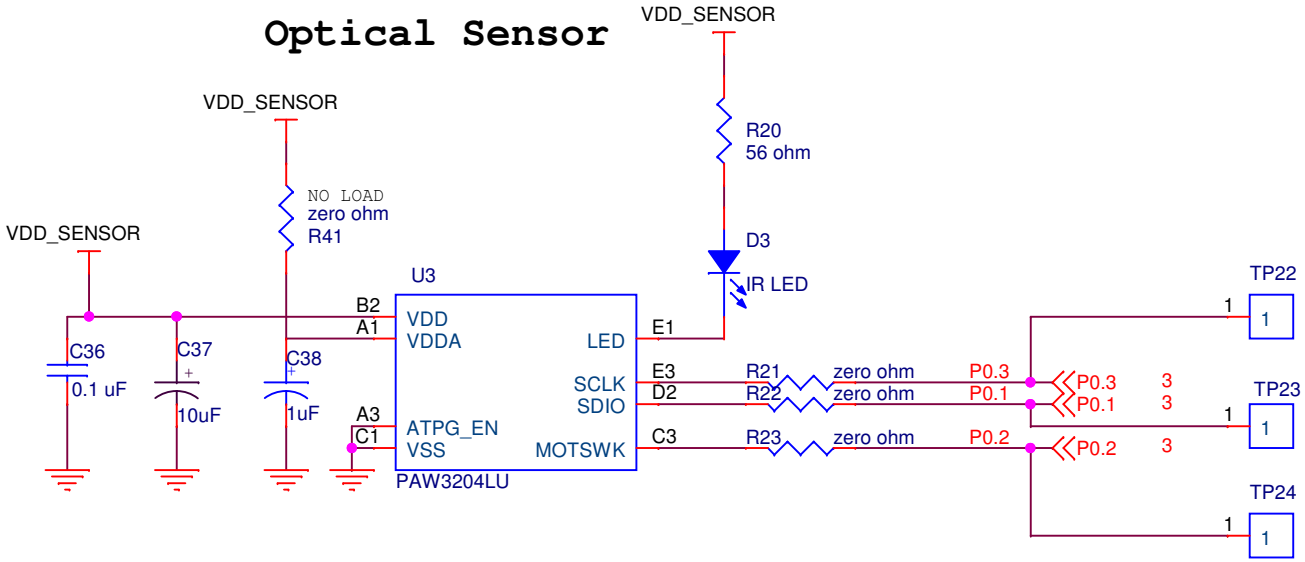

CYPRESS SEMICONDUCTOR © 2014		
Title: **CY5682 PRoC BLE Touch Mouse Main Board**		
Size: A	Document Number: **630-60218-01**	Rev: 2.1
Date: Thursday, January 08, 2015	Sheet 5 of 7	

Trackpad Module

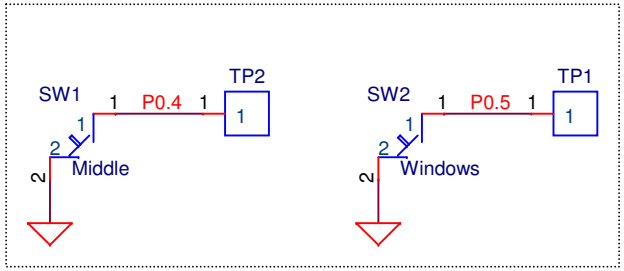

Trackpad area

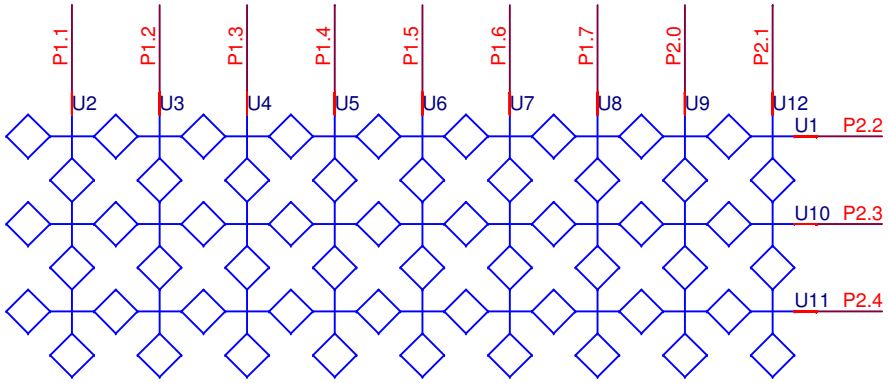

Connector to interface Trackpad Module with CY5682 Main Board.

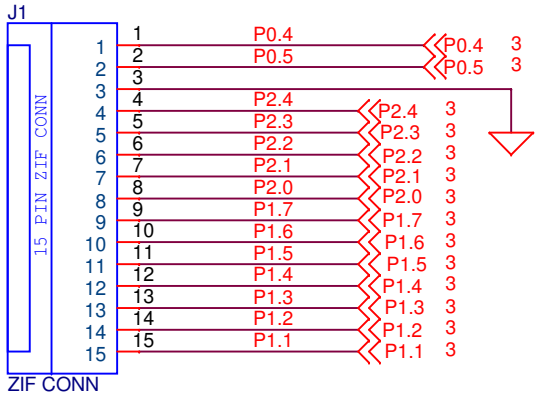

Note: Make sure pins of J1 connects with respective pins on J4 connector on Main board through FPC Connector

CYPRESS SEMICONDUCTOR © 2014		
Title: CY5682 PRoC BLE Touch Mouse Trackpad Module		
Size: A	Document Number: 630-60218-01	Rev: 2.1
Date: Thursday, January 08, 2015	Sheet 6 of 7	